NOTE: SUPPLIED WITH COMMERCIAL GRADE ELECTROLESS NICKEL PLATING.

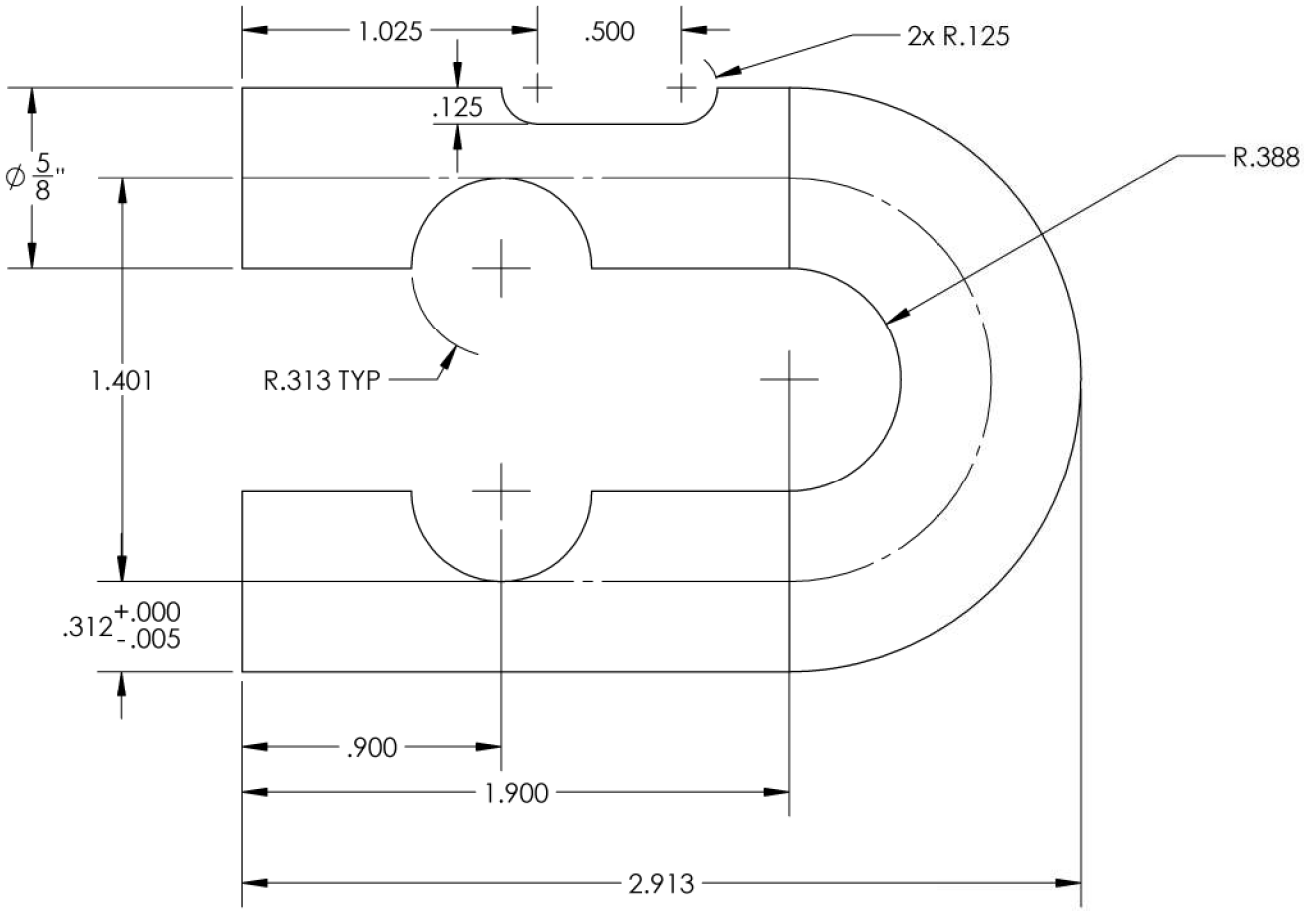

THIRD ANGLE PROJECTION INCH DIMENSIONS UNLESS OTHERWISE NOTED ON DRAWING	CAPACITY: N/A TESTED TO: NOT TESTED DESIGN SPECIFICATION: N/A WELD SPECIFICATION: N/A SURFACE FINISH: SEE NOTE SECTION ETCHED: N/A	CHECKED DATE: 3/3/21 UNLESS OTHERWISE SPECIFIED FROM CUSTOMER OR ANY OTHER QUALIFIED SOURCE CRITICAL TO THE DESIGN OF THE PRODUCT, ALL DIMENSIONS, TOLERANCES, AND SURFACE TEXTURES/FINISHES WILL COMPLY WITH INDUSTRY STANDARD AND ARE LEFT TO DESIGNEES JUDGMENT AND PROFESSIONAL OPINION.	TITLE ∅5/8" U-PIN PART/MODEL NUMBER: CSA-594429 — REV: --- DRAWN BY: TH — CHECKED BY: JK — PAGE: 1 OF 1